THIS DESIGN INFORMATION IS THE PROPERTY OF VACUUM TECHNIQUES PVT. LTD. AND SHOULD NOT BE GIVEN OR HANDED OVER OR DIVULGED TO ANY OTHER PERSON WITHOUT THE EXPRESS PERMISSION OF THE COMPANY IN WRITING. THE MATTER IN GIVEN ON THIS DRAWING IS TO BE TREATED AS STRICTLY CONFIDENTIAL

REVISION COLUMN					
REV.	DESCRIPTION	DESIGNED BY:	DRAWN BY:	DRAWN DATE:	VERIFED BY
R0	FOR CUSTOMER APPROVAL	VTPL	RAKESH	25-08-2022	M. GIRISH
R1	CG& CO-ORDINATE SYSTEM ADDED	VTPL	RAKESH	02/09/2022	M. GIRISH
R2	LASHING POINT DETAILS ADDED	VTPL	RAKESH	14/10/2022	M. GIRISH
R3	DRAWING REVISED	VTPL	RAKESH	24/08/2023	M. GIRISH
R4	DRAWING REVISED	VTPL	RAKESH	04/03/2024	M. GIRISH
R5	TITLE BLOCK & QTY REVISED	VTPL	RAKESH	04/03/2024	M. GIRISH

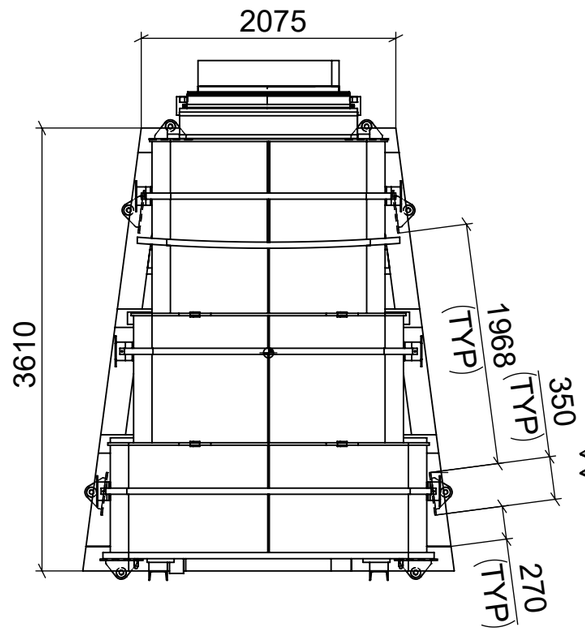

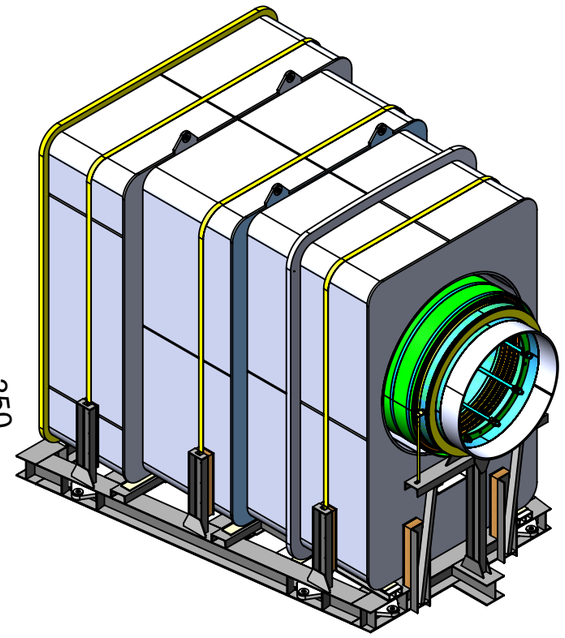

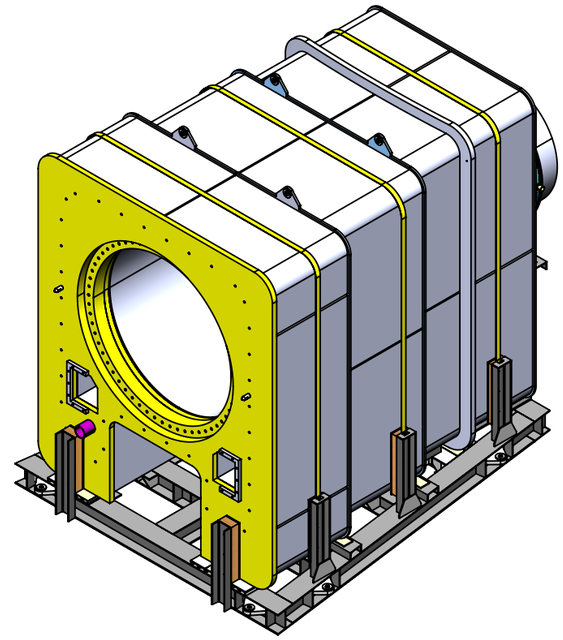

NYLON STRAP RATED FOR 5TON

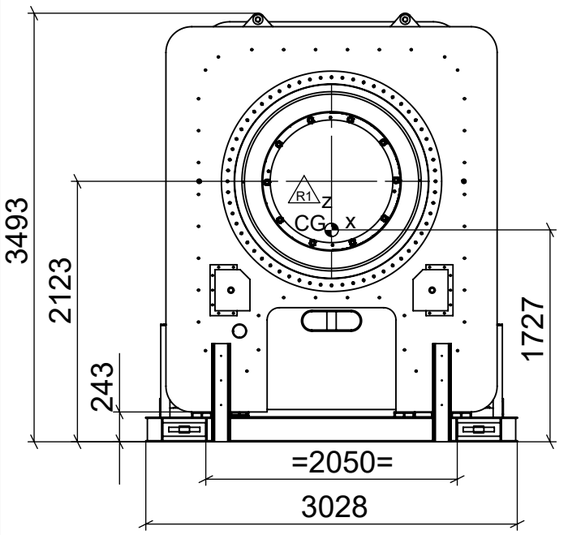

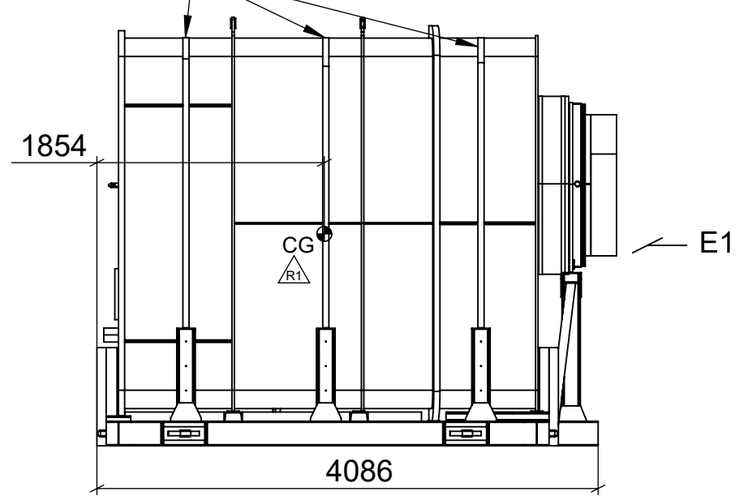

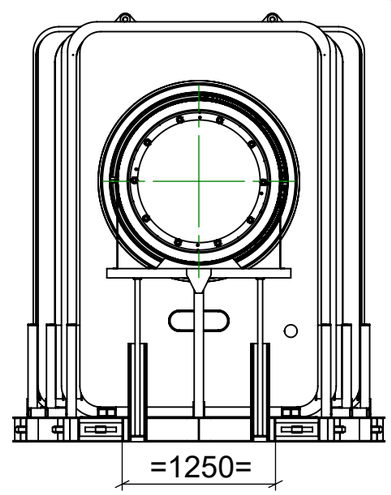

VIEW E1

VACUUM TECHNIQUES Pvt. Ltd.
2/13, 1st PHASE, 1st STAGE, P.I.A, BANGALORE-560 058

SIZE	REF.DWG		NAME	DATE
MATERIAL	-	DESIGNED BY:	VTPL	
QTY.	06	DRAWN BY:	RAKESH	25-08-2022
ALL DIMENSIONS ARE IN mm		REVIEWED BY:	-	
		VERIFED BY:	M.GIRISH	

O. A. No. : F-19138
CLIENT: ITER-INDIA
REVISION: R5
PROJECTION
SCALE: NTS
WEIGHT (Kg.) 18894
SHEET SIZE: A3
SHEET NO 1 of 1

▽ FINISH IF NOT SHOWN ▽▽▽▽ ▽▽▽ ▽▽ ▽ ~

GENERAL TOLERANCES IF NOT SPECIFIED

N1	N2	N3	N4	N5	N6	N7	N8	N9	N10	N11	N12
0.025	0.05	0.1	0.2	0.4	0.8	1.6	3.2	6.3	12.5	25	50

SURFACE FINISH IN MICRONS AS PER IS:3073-1967

Example for $R_A = 0.8$
$\sqrt{R_A 0.8}$ MACHINED SURF. $\blacktriangledown R_A 0.8$ VAC.-SEAL. SURF.

LINEAR DIMENSIONS

OVER	UP TO	TOL.
-	10	±0.1
10	30	±0.2
30	100	±0.3
100	300	±0.5
300	1000	±0.8
1000	2000	±1.2

ANGULAR DIMENSIONS

LENGTH OF SHORTER SIDE OF ANGLE

OVER	UP TO	TOL.
-	10	±1°
10	30	±0.30°
30	100	±0.20°
100	-	±0.10°

REMOVE BURRS & SHARP CORNERS.
FREE MEASURE TOLERANCE SHOULD BE AS PER MEDIUM IS2102-1993 U.O.S.

FOR SEALING SURFACES: GROOVES AND MARKS ACROSS THE SEALING COURSE ARE NOT ALLOWED

DRAWING NO.: F-19138-TCPH-TS-01-00

TITLE: TRANSPORTATION FRAME FOR TCPH

THIS DESIGN INFORMATION IS THE PROPERTY OF VACUUM TECHNIQUES PVT. LTD. AND SHOULD NOT BE GIVEN OR HANDED OVER OR DIVULGED TO ANY OTHER PERSON WITHOUT THE EXPRESS PERMISSION OF THE COMPANY IN WRITING. THE MATTER IN GIVEN ON THIS DRAWING IS TO BE TREATED AS STRICTLY CONFIDENTIAL

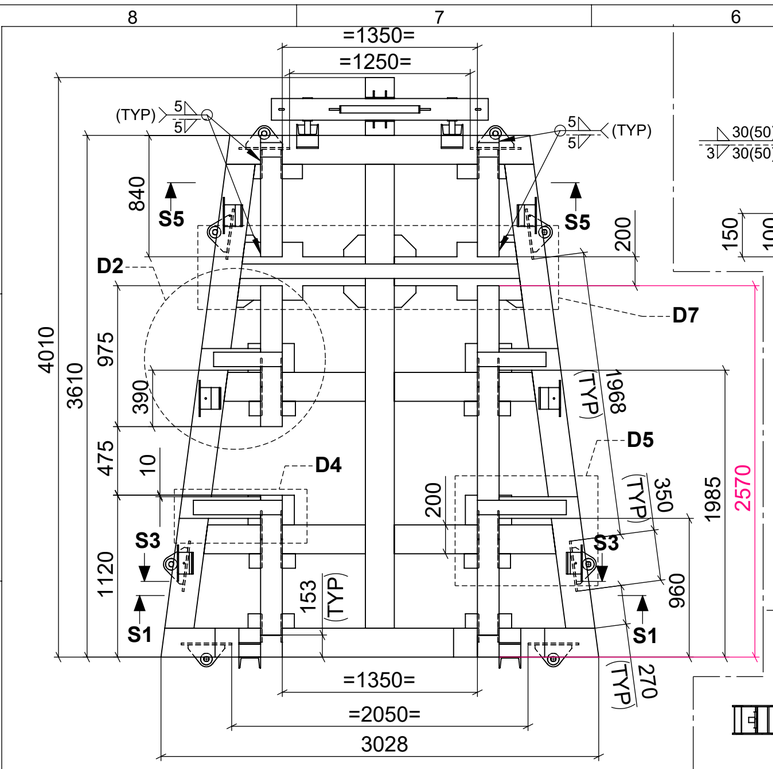

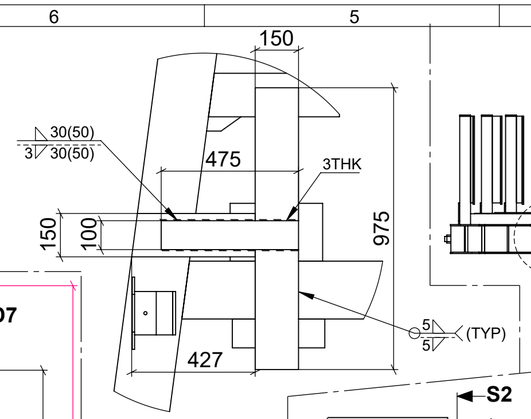

DETAIL D2

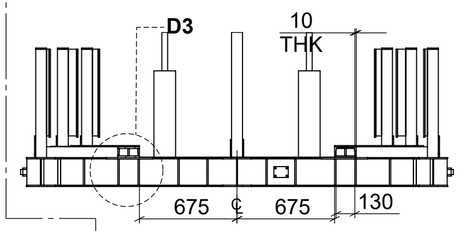

SECTION S1-S1

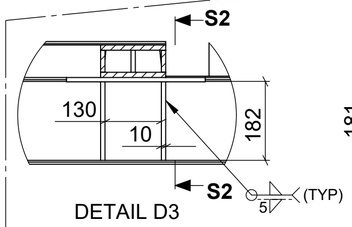

DETAIL D3

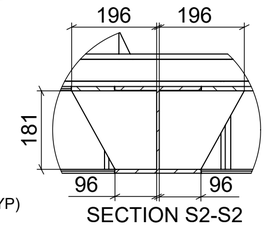

SECTION S2-S2

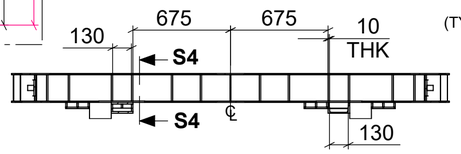

SECTION S3-S3

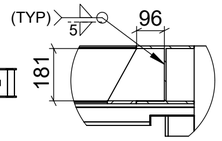

SECTION S4-S4

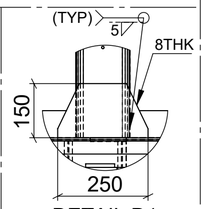

DETAIL D1

STAINLESS STEEL CLADDING

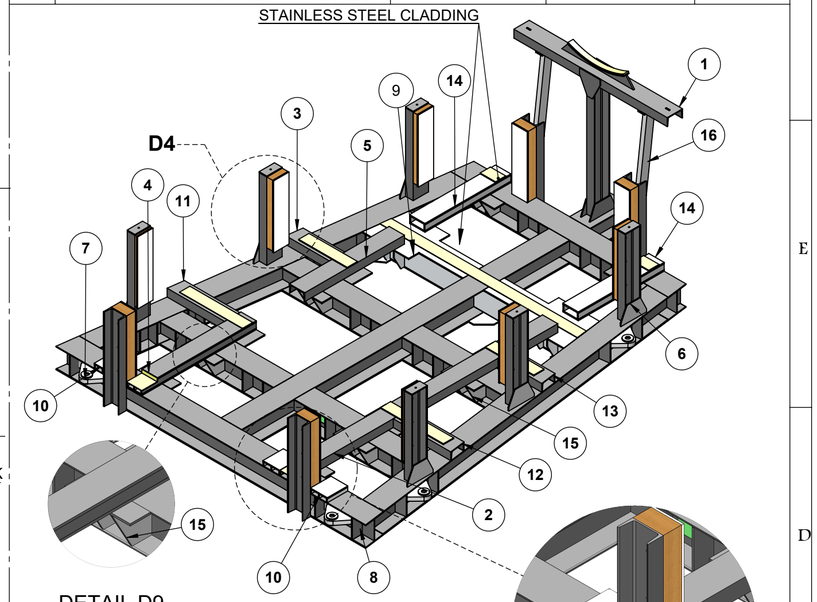

DETAIL D9

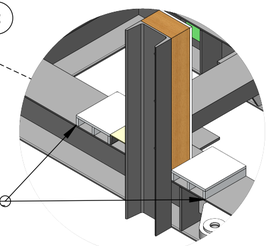

DETAIL D8

NOTE:
STRUCTURE SHALL BE PAINTED WITH TWO COAT OF EPOXY PRIMER FOLLOWED BY ONE COAT OF EPOXY PAINT

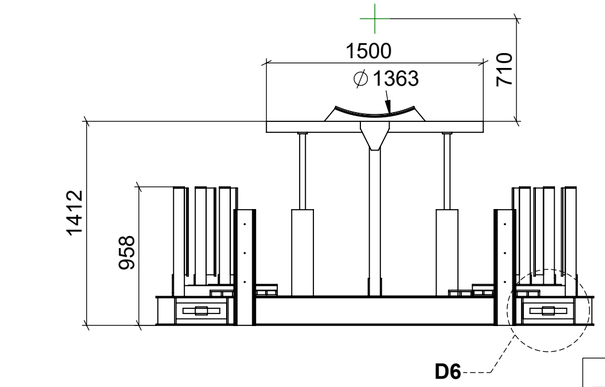

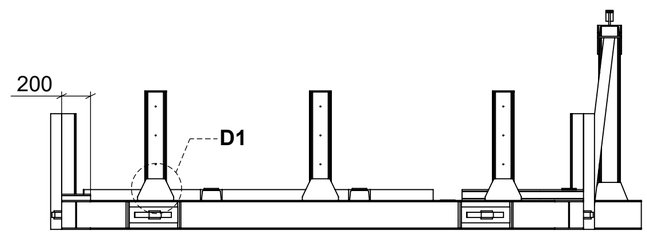

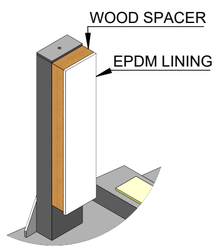

DETAIL D4

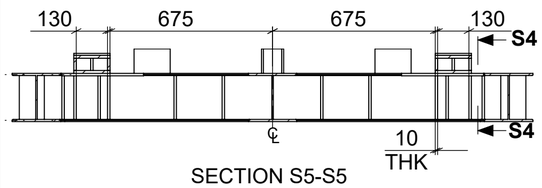

SECTION S5-S5

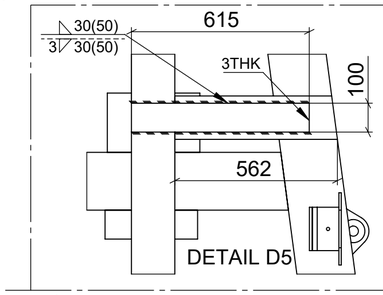

DETAIL D5

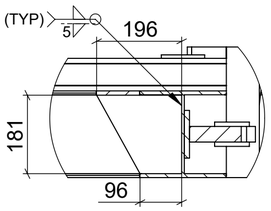

SECTION S4-S4

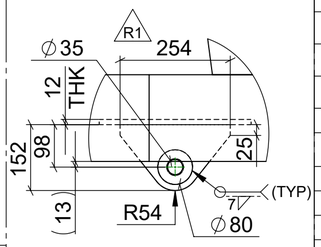

VIEW T

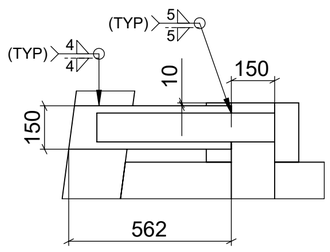

DETAIL D4

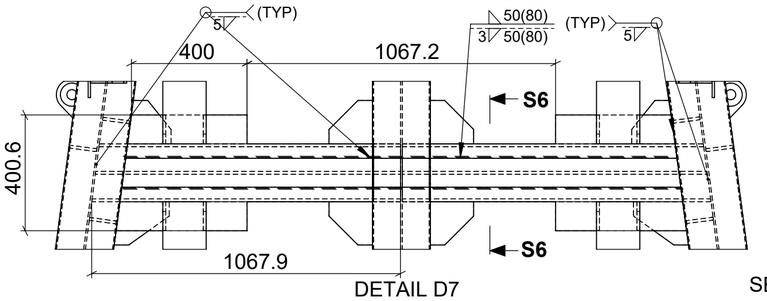

DETAIL D7

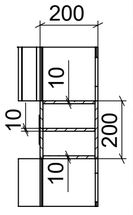

SECTION S6-S6

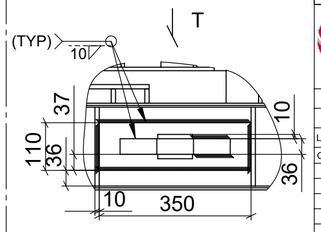

DETAIL D6

REVISION COLUMN

REV.	DESCRIPTION	DRAWN BY:	DRAWN DATE:	VERIFED BY
R0	FOR CUSTOMER APPROVAL	RAKESH	25-08-2022	M. GIRISH
R1	PART NO:F-19138-TCPH-TS-01-1G&H ADDED	RAKESH	14/10/2022	M. GIRISH
R2	PART NO:F-19138-TCPH-TS-01-1I&1O ADDED	RAKESH	24/08/2023	M. GIRISH
R3	F-19138-TCPH-TS-01-1P ADDED	RAKESH	04/03/2024	M. GIRISH
R4	TITLE BLOCK NAME REVISED& QTY REVISED	RAKESH	12/04/2024	M. GIRISH

BOM TABLE

ITEM NO.	PART NUMBER	DESCRIPTION	MATERIAL	SIZE	QTY.	WT/KG
16	F-19138-TCPH-TS-01-1P	C-CHANNEL-7	IS 808 :1989	ISMC75,1291L	2	8.48
15	F-19138-TCPH-TS-01-1O	GUSSET-2	IS:2062 Gr.B	181x196x10THK	24	2.09
14	F-19138-TCPH-TS-01-1N	BOTTOM SUPPORT_2	IS:2062Gr.B	REF.DWG	2	32.48
13	F-19138-TCPH-TS-01-1M	C-CHANNEL-6	IS 808 :1989	ISMC-150,427L	1	7.68
12	F-19138-TCPH-TS-01-1L	C-CHANNEL-5	IS 808 :1989	ISMC-150,562L	1	10.16
11	F-19138-TCPH-TS-01-1K	C-CHANNEL-4	IS 808 :1989	ISMC-150,562L	1	11.61
10	F-19138-TCPH-TS-01-1J	SUPPORT-3	IS-2062 Gr. B	REF.DWG	3	4.11
9	F-19138-TCPH-TS-01-1I	SUPPORT-2	IS-2062 Gr. B	REG.DWG	1	179.69
8	F-19138-TCPH-TS-01-1H	PLATE	IS:2062 Gr.B	110x350Lx12THK	8	3.65
7	F-19138-TCPH-TS-01-1G	LUG	IS:2062 Gr.B	152x254Lx36THK	8	7.64
6	F-19138-TCPH-TS-01-1F	GUSSET-1	IS:2062 Gr.B	150x250Lx8THK	6	1.90
5	F-19138-TCPH-TS-01-1E	C-CHANNEL-3	IS 808 :1989	ISMC-150,975L	1	20.93
4	F-19138-TCPH-TS-01-1D	BOTTOM SUPPORT_1	IS-2062 Gr. B	REF.DWG	1	38.80
3	F-19138-TCPH-TS-01-1C	C-CHANNEL-2	IS 808 :1989	ISMC-150,427L	1	7.66
2	F-19138-TCPH-TS-01-1B	C-CHANNEL-1	IS 808 :1989	ISMC-150,2570L	1	52.78
1	F-19138-TCPH-TS-01-1A	FRAME	IS 808 :1989	REF.DWG	1	1082.51

VACUUM TECHNIQUES Pvt. Ltd.
2/13, 1st PHASE, 1st STAGE, P.I.A, BANGALORE-560 058

SIZE	REF.DWG		
MATERIAL	-	NAME	DATE
QTY.	05 R4	DRAWN BY:	RAKESH 25-08-2022
		REVIEWED BY:	
		VERIFED BY:	M.GIRISH

ALL DIMENSIONS ARE IN mm

O. A. No. : F-19138
CLIENT: ITER-INDIA
REVISION: R4
PROJECTION
SCALE: NTS
WEIGHT (Kg.) 1969.84
SHEET SIZE: A2
SHEET NO 1 of 1

▽ FINISH IF NOT SHOWN ▽▽▽▽ ▽▽▽ ▽▽ ▽ ~

GENERAL TOLERANCES IF NOT SPECIFIED

N1	N2	N3	N4	N5	N6	N7	N8	N9	N10	N11	N12
0.025	0.05	0.1	0.2	0.4	0.8	1.6	3.2	6.3	12.5	25	50

SURFACE FINISH IN MICRONS AS PER IS:3073-1967

Example for $R_a = 0.8$: R0.8 MACHINED SURF. R0.8 VAC.-SEAL. SURF.

LINEAR DIMENSIONS

OVER	UP TO	TOL.
0.5	3	±0.2
3	6	±0.3
6	30	±0.5
30	120	±0.8
120	400	±1.2
400	1000	±2
1000	2000	±3
2000	4000	±4

ANGULAR DIMENSIONS

LENGTH OF SHORTER SIDE OF ANGLE OVER	UP TO	TOL.
-	10	±1°30'
10	50	±1°
50	120	±0°30'
120	400	±0°15'
OVER 400		±0°10'

REMOVE BURRS & SHARP CORNERS.
FREE MEASURE TOLERANCE SHOULD BE AS PER COARSE ISO2768
FOR SEALING SURFACES: GROOVES AND MARKS ACROSS THE SEALING COURSE ARE NOT ALLOWED

DRAWING NO.: F-19138-TCPH-TS-01-00

TITLE: TRANSPORTATION SCHEME FOR TCPH TYPE-A,B&D R4

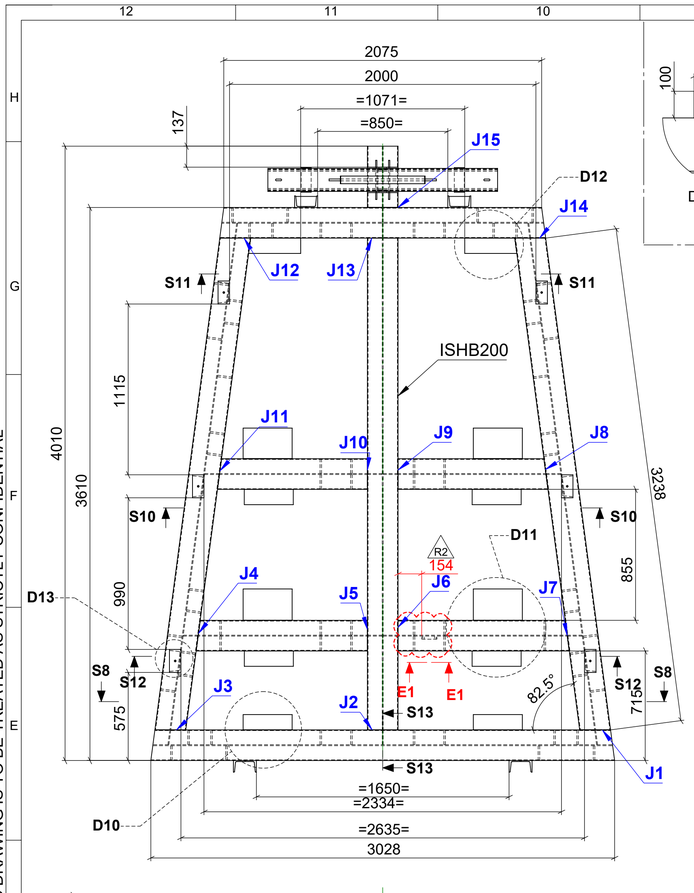

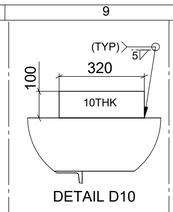

DETAIL D10

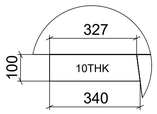

DETAIL D12

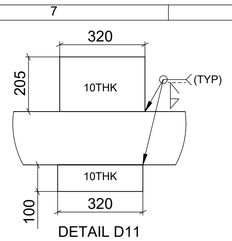

DETAIL D11

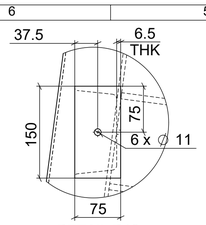

DETAIL D13

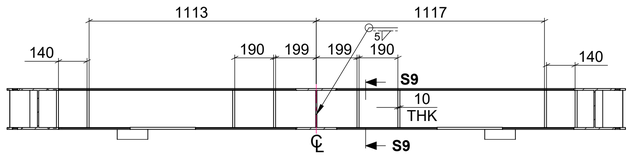

SECTION S8-S8

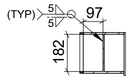

SECTION S9-S9

X3

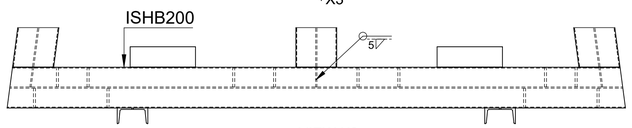

VIEW X3

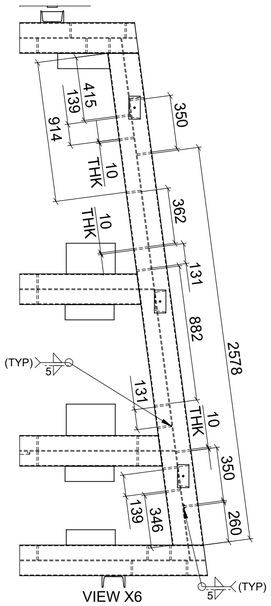

VIEW X6

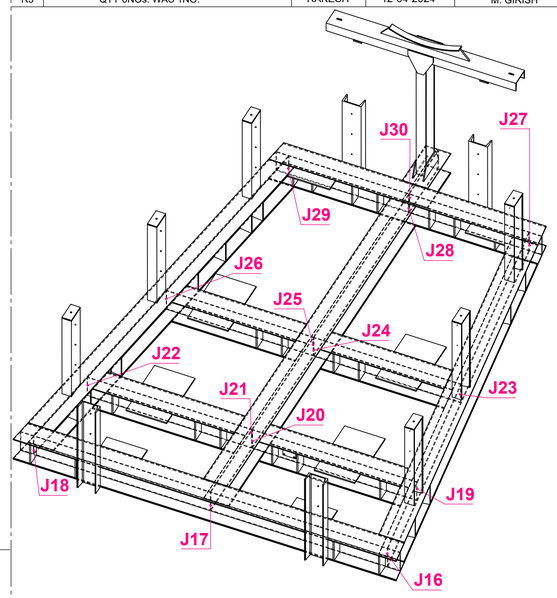

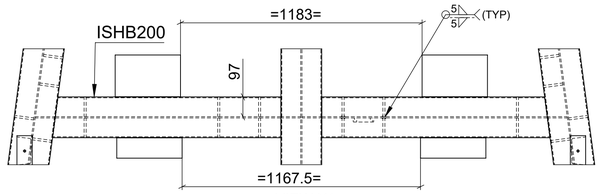

VIEW X1

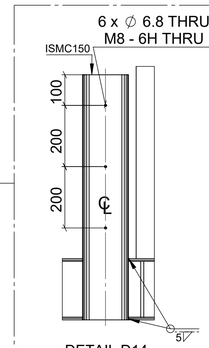

DETAIL D14

X1

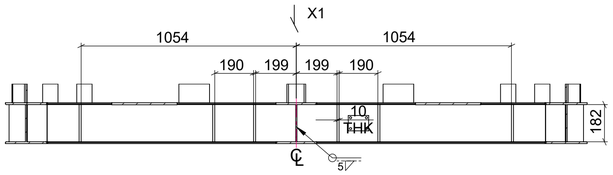

SECTION S12-S12

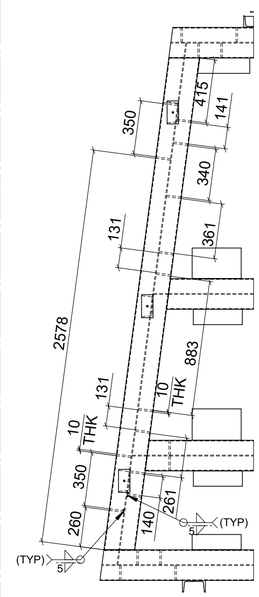

VIEW X7

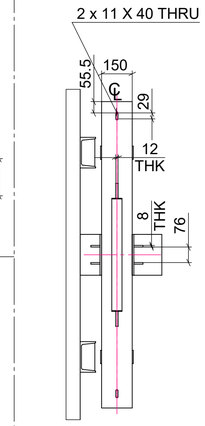

VIEW X5

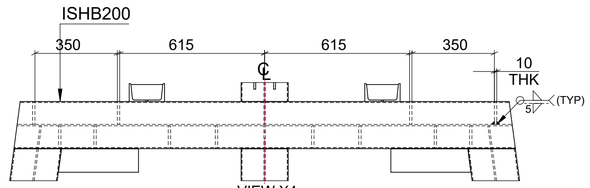

VIEW X4

X4

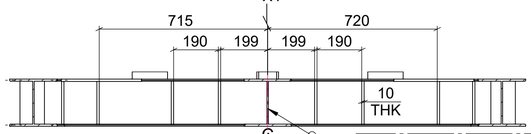

SECTION S11-S11

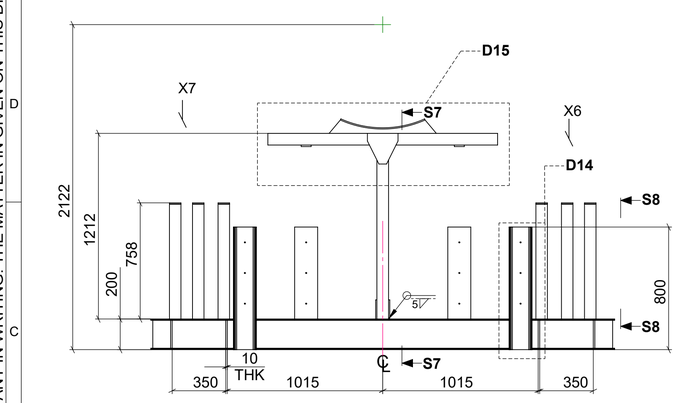

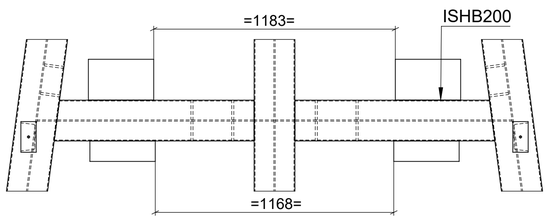

VIEW X2

X2

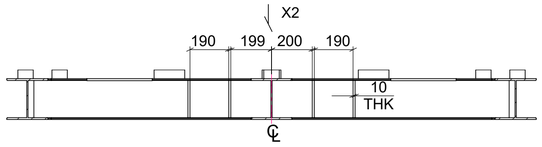

SECTION S10-S10

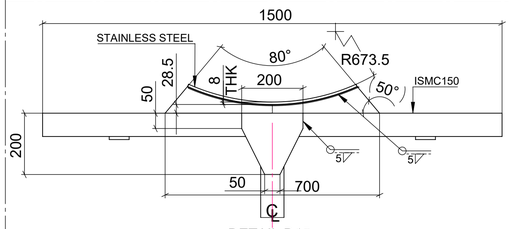

DETAIL D15

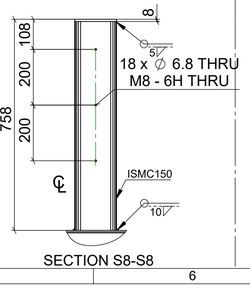

SECTION S8-S8

X5

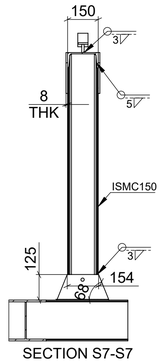

SECTION S7-S7

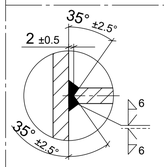

SECTION S14-S14

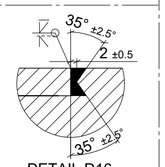

DETAIL D16

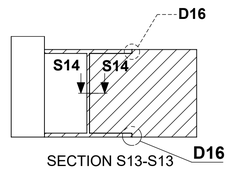

SECTION S13-S13

TYP WELD DETAIL B/W
ISHB-200 TO ISHB-200

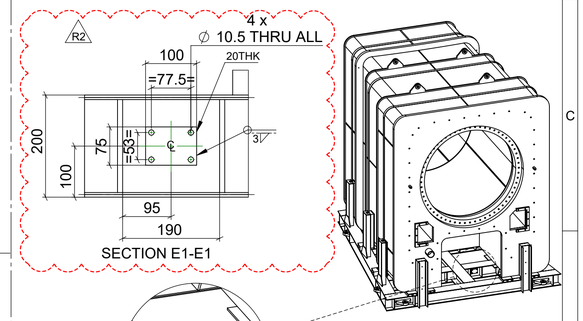

SECTION E1-E1

DETAIL D32

NOTE: TOLERANCE AS PER IS:13920

REVISION COLUMN

REV.	DESCRIPTION	DRAWN BY:	DRAWN DATE:	VERIFED BY
R0	FOR CUSTOMER APPROVAL	RAKESH	25-08-2022	M. GIRISH
R1	DRAWING REVISED	RAKESH	24-08-2023	M. GIRISH
R2	ACCELEOMETR MOUNTING PLATE ADDED	RAKESH	16-03-2024	M. GIRISH
R3	QTY 6NOs. WAS 1NO.	RAKESH	12-04-2024	M. GIRISH

NON DESTRUCTION EXAMINATION(NDE) TABLE

SL NO	PORT JOINT NO	SIZE	EXAMINATION VE	EXAMINATION PT
1	J1 TO J15	35° ±2.5° / 35° ±2.5°	YES	100%
2	J16 TO J30	35° ±2.5° / 35° ±2.5°	YES	100%

VACUUM TECHNIQUES Pvt. Ltd.
2/13, 1st PHASE, 1st STAGE, P.I.A, BANGALORE-560 058

SIZE	REF.DWG		
MATERIAL	IS 808 :1989	DRAWN BY:	RAKESH 25-08-2022
QTY.	06 (R3)	REVIEWED BY:	-
ALL DIMENSIONS ARE IN mm		VERIFIED BY:	M.GIRISH

NAME DATE

FINISH IF NOT SHOWN

GENERAL TOLERANCES IF NOT SPECIFIED			N1	N2	N3	N4	N5	N6	N7	N8	N9	N10	N11	N12
LINEAR DIMENSIONS			0.025	0.05	0.1	0.2	0.4	0.8	1.6	3.2	6.3	12.5	25	50
OVER	UP TO	TOL.												
0.5	3	±0.2												
3	6	±0.3												
6	30	±0.5												
30	120	±0.8												
120	400	±1.2												
400	1000	±2												
1000	2000	±3												
2000	4000	±4												

ANGULAR DIMENSIONS

LENGTH OF SHORTER SIDE OF ANGLE		
OVER	UP TO	TOL.
-	10	±1°30'
10	50	±1°
50	120	±0°30'
120	400	±0°15'
OVER 400		±0°10'

SURFACE FINISH IN MICRONS AS PER IS:3073-1967

Example for $R_a = 0.8$: MACHINED SURF. VAC.-SEAL. SURF.

REMOVE BURRS & SHARP CORNERS.
FREE MEASURE TOLERANCE SHOULD BE AS PER COARSE ISO2768
FOR SEALING SURFACES: GROOVES AND MARKS ACROSS THE SEALING COURSE ARE NOT ALLOWED

DRAWING NO.: F-19138-TCPH-TS-01-1A

TITLE: FRAME

O. A. No.: F-19138
CLIENT: ITER-INDIA
REVISION: R3
PROJECTION
SCALE: NTS
WEIGHT (Kg.): 1082.51
SHEET SIZE: A1
SHEET NO: 1 of 1

THIS DESIGN INFORMATION IS THE PROPERTY OF VACUUM TECHNIQUES PVT. LTD. AND SHOULD NOT BE GIVEN OR HANDED OVER OR DIVULGED TO ANY OTHER PERSON WITHOUT THE EXPRESS PERMISSION OF THE COMPANY IN WRITING. THE MATTER IN GIVEN ON THIS DRAWING IS TO BE TREATED AS STRICTLY CONFIDENTIAL

THIS DESIGN INFORMATION IS THE PROPERTY OF VACUUM TECHNIQUES PVT. LTD. AND SHOULD NOT BE GIVEN OR HANDED OVER OR DIVULGED TO ANY OTHER PERSON WITHOUT THE EXPRESS PERMISSION OF THE COMPANY IN WRITING. THE MATTER IN GIVEN ON THIS DRAWING IS TO BE TREATED AS STRICTLY CONFIDENTIAL

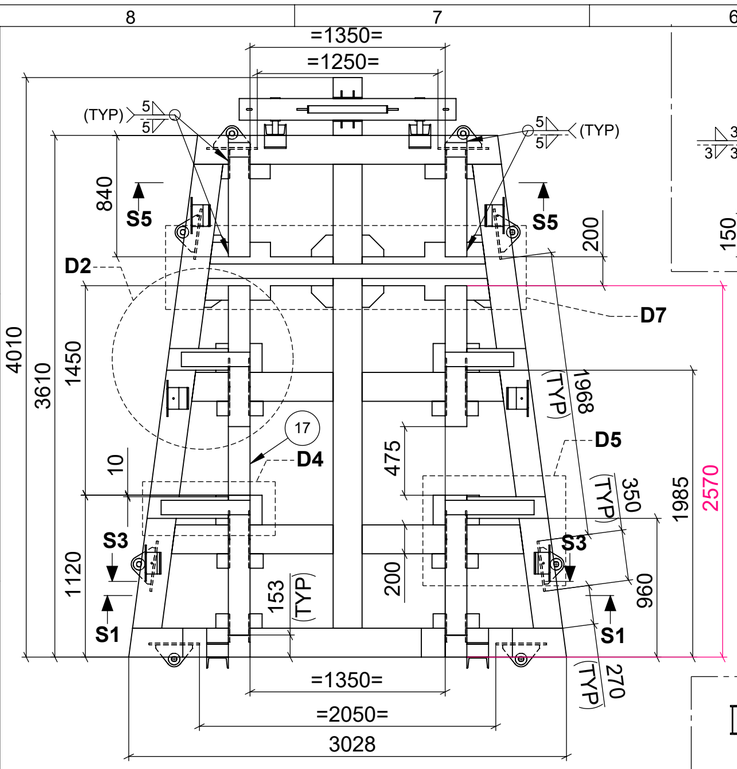

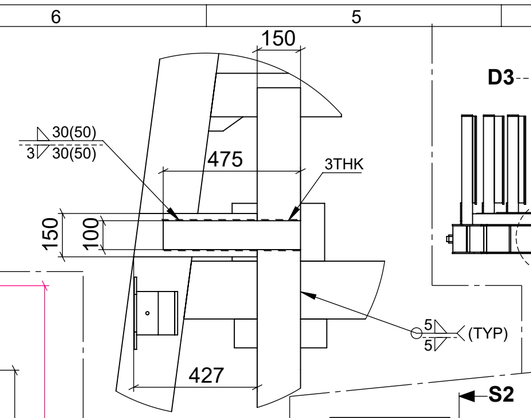

DETAIL D2

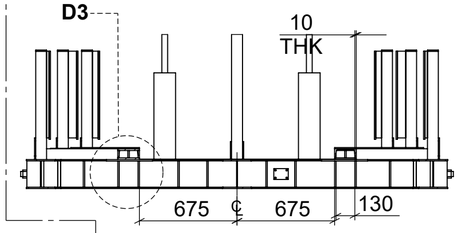

SECTION S1-S1

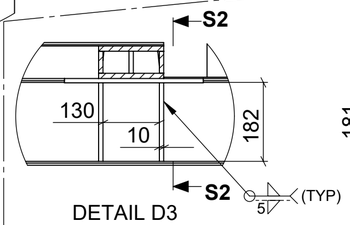

DETAIL D3

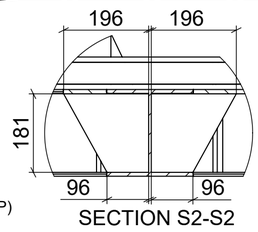

SECTION S2-S2

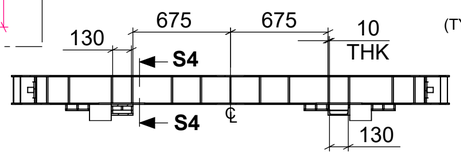

SECTION S3-S3

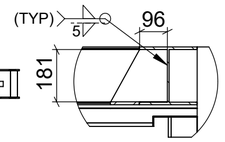

SECTION S4-S4

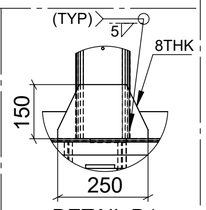

DETAIL D1

REVISION COLUMN

REV.	DESCRIPTION	DRAWN BY:	DRAWN DATE:	VERIFED BY
R0	FOR CUSTOMER APPROVAL	RAKESH	25-08-2022	M. GIRISH
R1	PART NO:F-19138-TCPH-TS-01-1G&H ADDED	RAKESH	14/10/2022	M. GIRISH
R2	PART NO:F-19138-TCPH-TS-01-1I&1O ADDED	RAKESH	24/08/2023	M. GIRISH
R3	PART NO:F-19138-TCPH-TS-01-1P&1Q ADDED	RAKESH	04/03/2024	M. GIRISH
R4	DRAWING NO. & TITLE BLOCK NAME REVISED	RAKESH	12/04/2024	M. GIRISH

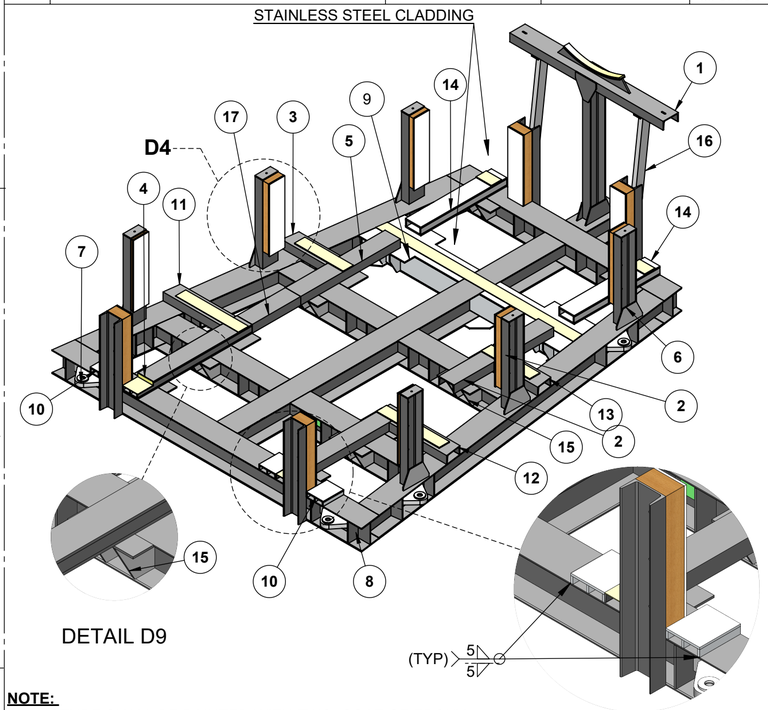

DETAIL D9

DETAIL D8

NOTE:
STRUCTURE SHALL BE PAINTED WITH TWO COAT OF EPOXY PRIMER FOLLOWED BY ONE COAT OF EPOXY PAINT

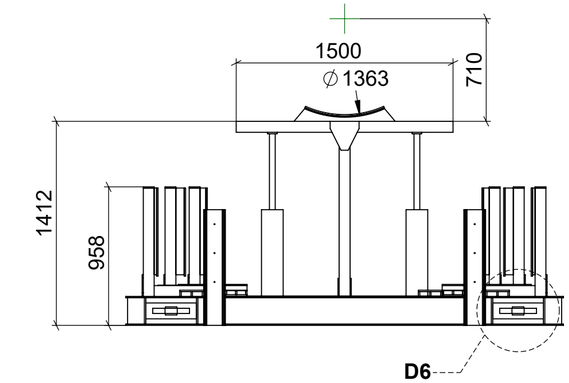

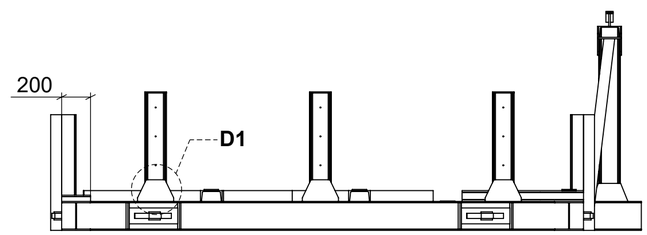

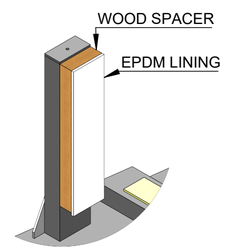

DETAIL D4

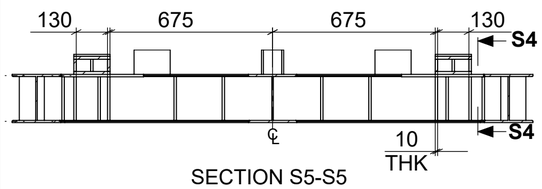

SECTION S5-S5

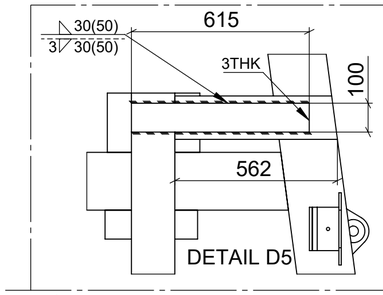

DETAIL D5

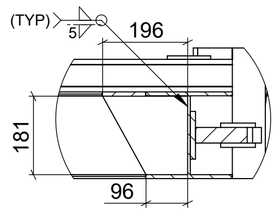

SECTION S4-S4

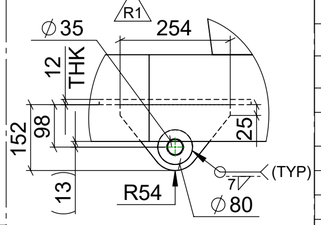

VIEW T

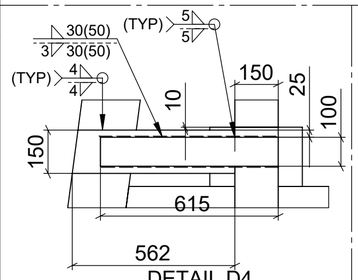

DETAIL D4

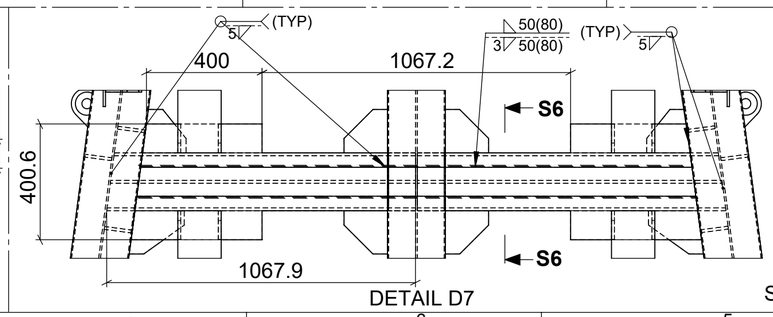

DETAIL D7

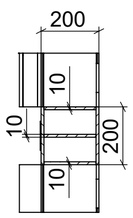

SECTION S6-S6

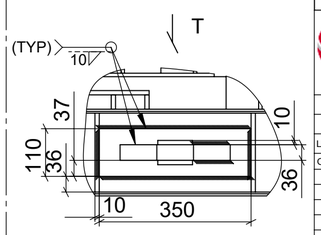

DETAIL D6

ITEM NO.	PART NUMBER	DESCRIPTION	MATERIAL	SIZE	QTY.	WT/KG
17	F-19138-TCPH-TS-01-1Q	C-CHANNEL-8	IS 808 :1989	ISMC-150,475L	1	8.73
16	F-19138-TCPH-TS-01-1P	C-CHANNEL-7	IS 808 :1989	ISMC75,1291L	2	8.48
15	F-19138-TCPH-TS-01-1O	GUSSET-2	IS:2062 Gr.B	181x196x10THK	24	2.09
14	F-19138-TCPH-TS-01-1N	BOTTOM SUPPORT_2	IS:2062Gr.B	REF.DWG	2	32.48
13	F-19138-TCPH-TS-01-1M	C-CHANNEL-6	IS 808 :1989	ISMC-150,427L	1	7.68
12	F-19138-TCPH-TS-01-1L	C-CHANNEL-5	IS 808 :1989	ISMC-150,562L	1	10.16
11	F-19138-TCPH-TS-01-1K	C-CHANNEL-4	IS 808 :1989	ISMC-150,562L	1	11.61
10	F-19138-TCPH-TS-01-1J	SUPPORT-3	IS-2062 Gr. B	REF.DWG	3	4.11
9	F-19138-TCPH-TS-01-1I	SUPPORT-2	IS-2062 Gr. B	REG.DWG	1	179.69
8	F-19138-TCPH-TS-01-1H	PLATE	IS:2062 Gr.B	110x350Lx12THK	8	3.65
7	F-19138-TCPH-TS-01-1G	LUG	IS:2062 Gr.B	152x254Lx36THK	8	7.64
6	F-19138-TCPH-TS-01-1F	GUSSET-1	IS:2062 Gr.B	150x250Lx8THK	6	1.90
5	F-19138-TCPH-TS-01-1E	C-CHANNEL-3	IS 808 :1989	ISMC-150,975L	1	20.93
4	F-19138-TCPH-TS-01-1D	BOTTOM SUPPORT_1	IS-2062 Gr. B	REF.DWG	1	38.80
3	F-19138-TCPH-TS-01-1C	C-CHANNEL-2	IS 808 :1989	ISMC-150,427L	1	7.66
2	F-19138-TCPH-TS-01-1B	C-CHANNEL-1	IS 808 :1989	ISMC-150,2570L	1	52.78
1	F-19138-TCPH-TS-01-1A	FRAME	IS 808 :1989	REF.DWG	1	1082.51

BOM TABLE

VACUUM TECHNIQUES Pvt. Ltd.
2/13, 1st PHASE, 1st STAGE, P.I.A, BANGALORE-560 058

SIZE	REF.DWG			
MATERIAL	-	NAME	DATE	
QTY.	01	DRAWN BY: RAKESH	25-08-2022	
ALL DIMENSIONS ARE IN mm		REVIEWED BY:		
		VERIFED BY:	M.GIRISH	

O. A. No.: F-19138
CLIENT: ITER-INDIA
REVISION: R4
PROJECTION
SCALE: NTS
WEIGHT (Kg.) 1969.84
SHEET SIZE: A2
SHEET NO 1 of 1

FINISH IF NOT SHOWN

GENERAL TOLERANCES IF NOT SPECIFIED

LINEAR DIMENSIONS		
OVER	UP TO	TOL.
0.5	3	±0.2
3	6	±0.3
6	30	±0.5
30	120	±0.8
120	400	±1.2
400	1000	±2
1000	2000	±3
2000	4000	±4

ANGULAR DIMENSIONS		
LENGTH OF SHORTER SIDE OF ANGLE		
OVER	UP TO	TOL.
-	10	±1°30'
10	50	±1°
50	120	±0°30'
120	400	±0°15'
OVER 400		±0°10'

N1	N2	N3	N4	N5	N6	N7	N8	N9	N10	N11	N12
0.025	0.05	0.1	0.2	0.4	0.8	1.6	3.2	6.3	12.5	25	50

SURFACE FINISH IN MICRONS AS PER IS:3073-1967

Example for $R_a = 0.8$
$R_a 0.8$ MACHINED SURF.
$R_a 0.8$ VAC.-SEAL SURF.

REMOVE BURRS & SHARP CORNERS.
FREE MEASURE TOLERANCE SHOULD BE AS PER COARSE ISO2768

FOR SEALING SURFACES: GROOVES AND MARKS ACROSS THE SEALING COURSE ARE NOT ALLOWED

DRAWING NO.: F-19138-TCPH-TS-01-00(C) R4

TITLE: TRANSPORATION SCHEME FOR TCPH TYPE-C R4